PRODUCT SPECIFICATIONS & INSTRUCTIONS

Name: Oval PZ Escutcheon and Base
Item / Number: I00023

Standard: EN

Description: Oval PZ Escutcheon and Base
With 4 pcs of selfscrew (8#×19 steel)

Material: SS316 Rose, steel base

Escutcheon Size: 70×32×10mm

Base Size: 68×30×9mm

Finish: Escutcheon: SSS=Satin
Stainless Steel Base: Zinc Plating

Application: Residential

Base DWG as below:

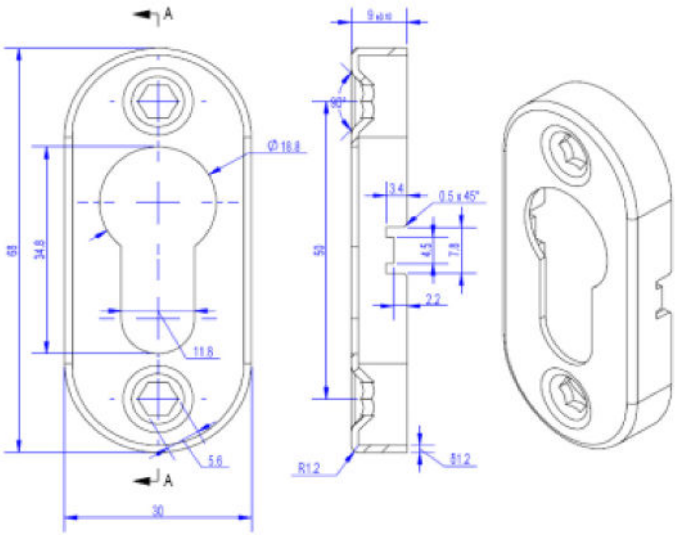

Product image:

Escutcheon DWG as below:

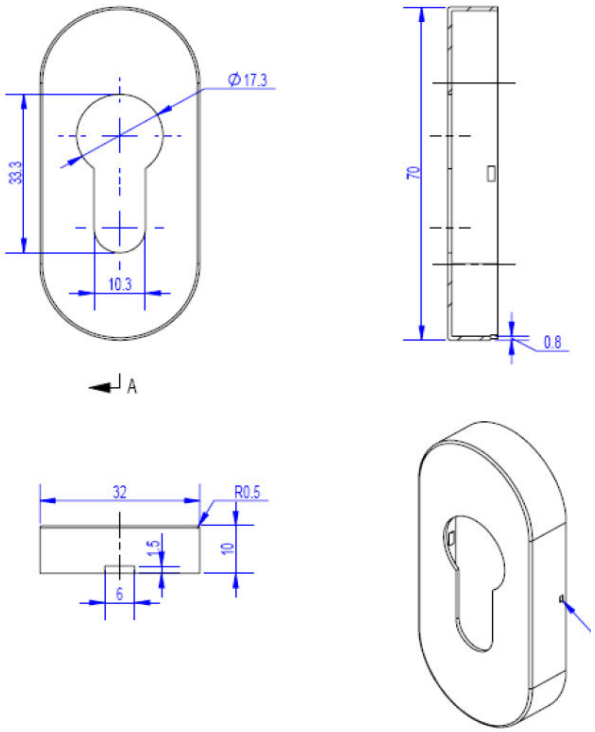

MB DIY, Southbank Road, Middlesbrough TS3 8AN | Telephone no. 01642 443974
Web: www.mbdiy.co.uk | Email: sales@diy.co.uk | Fax: 01642 035407 | Follow Us: MBDIYUK